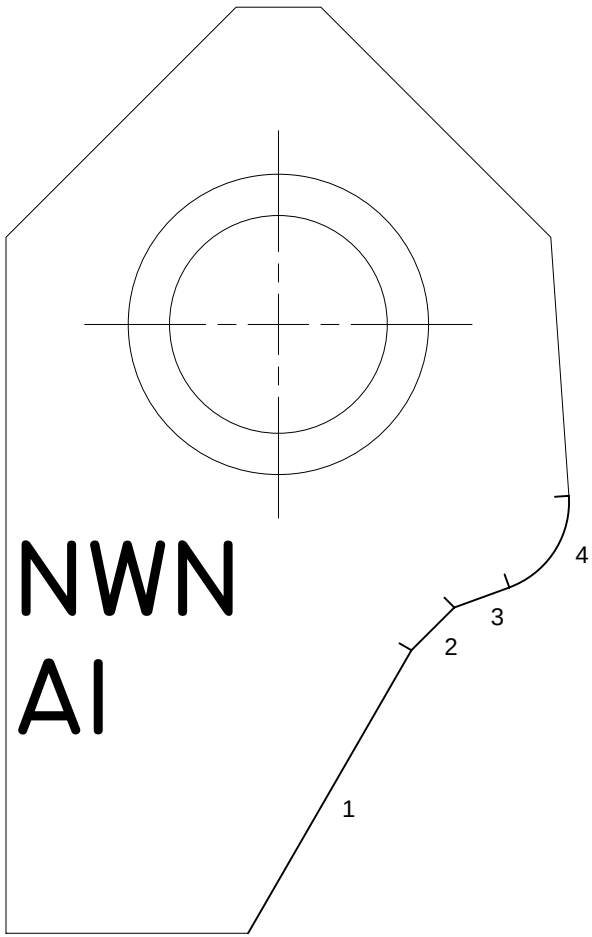

#	DeltaX	Length	Angle	Tan (ß¹)°	Tan (ß²)°	Radius
1	02.70mm	05.40mm	60.00			
***2**	**00.71mm**	**01.00mm**	**45.00**			
3	00.91mm	00.97mm	20.00			
4	00.98mm			20.00	94.00	01.50mm

Newen Inc.

Material :	Carbide	Drawing Date :	
Treatment :	None	Designed By :	
Relief Angle :	12	Approved By :	
Calibration :	No	Scale :	8:1
Filename :	WA1-NWN5442.nwn	Blueprint :	
Base :	No		

NWN 3aCAD™

NEWEN®

E-mail : contact@newen.com